Q/HG

HARBIN HAFEI INDUSTRY CO., LTD.

REGULATION

Q/HGC0015-2018

INSTEAD:

DYL58 TYPE SHORT STRESS MILL STAND

(Total 7 pages)

ISSUED ON 2018-12-29 IMPLEMENTATION ON 2018-12-29

HARBIN HAFEI INDUSTRY CO., LTD. ISSUE

LB5

FOREWORD

This regulation is specially formulated according to the GB/T 1.1-2009 《Directives for standardization - Part 1: structure and drafting of standards》, and combined with the actual situation of the companies scientific research, production and standardized control work

The regulation stipulates constitute, parameter, technical order, test methods and inspection rule of DYL58 Type Short Stress Mill Stand.

The regulation is appropriate for DYL58 Type Short Stress Mill.

The regulation is proposed by the company’s standardization committee.

The regulation is drafted by Electromechanical Equipment Manufacturing Company.

The main drafter of the regulation is Wang Yangang, Liu Tianxiang, Shi Shaodong.

The management of the regulation is in charge of standardization administration department.

DYL58 TYPE SHORT STRESS MILL STAND

1 Subject content and sphere of application

The regulation stipulates constitute, parameter, technical order, test method and inspection rule of DYL58 Type Short Stress Mill (hereinafter referred to as DYL58 MILL).

The regulation is appropriate for DYL58 Type Short Stress Mill.

2 Reference standard

The articles of the below document becomes the articles of this regulation after cited. The cited document with date and its later amending list (exclude mistake) or the revision are not situated this standard. However, encourage all parties which come to an agreement to study if use the latest versions of all these documents. For all cited document without date, its latest versions are applicable to this document.

YB/T036.1 GENERAL TECHNICAL CONDITIONS FOR METALLURGICAL EQUIPMENT MANUFACTURING- PRODUCTION TEST

3 Using conditions of DYL58 mill

Max rolling force: 200 Tone

Lubrication type of mill: gas-oil lubrication or grease lubrication

4 Type, constitute, parameter

4.1 Type

Principle of type establishment

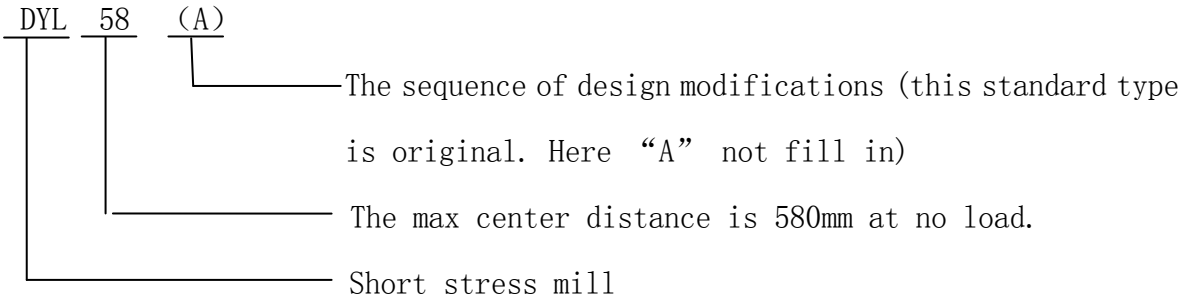

4.2 Constitute

DYL58 Mill constitutes of container, stand, roller gap adjusting unit, rest bar assembly and lubrication-cooling system.

The structure is as below, the rest bar assembly and lubrication-cooling system are not showed.

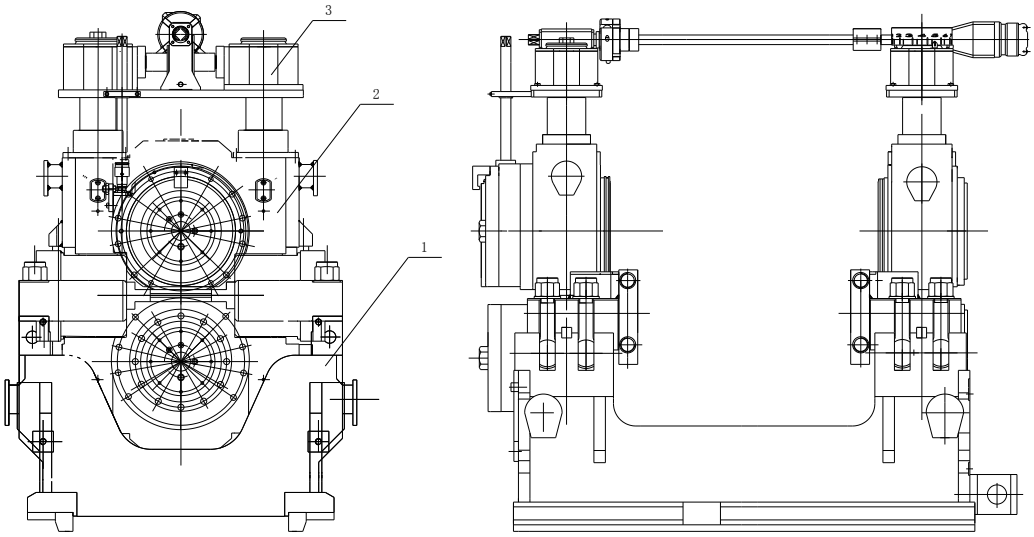

1. Container assembly 2. Stand assembly 3. Roller gap adjusting unit

4.3 Parameter

Mill type: short stress mill

Max roller working center distance with load: 550mm

Min roller working center distance with load: 460mm

Max roller working center distance without load: 580mm

Diameter of roller neck: 230mm

Roller barrel length: 750mm

Balance of chocks: hydraulic balance

Axial adjustment amount: ±3mm

Hydraulic motor: max pressure drop (continue) 20MPa, max flow (continue)100L/Min

5 Technical requirement

5.1 DYL58 mill should be manufacturing according to drawings and technical documents which have been approved by established procedure. And it should conform to YB/T036.1 standard to do the production inspection.

5.2 DYL58 mill should do the test after assembly. The test terms consist of the max/min center distance, axial adjusting amount, the movement situation of roller gap adjusting unit, and so on.

5.3 DYL58 Mill should do the manual turning test when assembly. It is not allowed to have the hysteresis phenomenon card.

5.4 DYL58 Mill should do the cold test before delivery.

6 Test methods

6.1 When the roller gap adjusting unit finishes assembly, manual turning, check if the whole unit turns flexibly.

6.2 Connect the roller gap adjusting unit with the hydraulic station, to check the whole unit moves flexibly, if there is hysteresis phenomenon card exist.

6.3 To check the pressure gage calibration, it should not more than 6Mpa when cold test without load.

6.4 When the hydraulic motor rotates positive and reversion, have a check if the mill stand can reach the max and minimum center distance.

6.5 Make the stand in minimum opening, check the gap between chock and support. It is required the max and minimum value of 8 positions (appendix A) should be within 0.2mm. If this value is out of required value, adjust the bronze screw to meet the technical requirement.

6.6 Check the axial alignment to make sure the assembly of the rollers and the working life of the roller bearing. This requirement requires checking the alignment situation one upper chock and bottom chock at max and minimum opening positions. It requires to through the center line when the hydraulic motor rotates

positive and reversion. The upper and lower deviation of two parts of test tools should be less than 0.2mm. See the appendix A.

6.7 To check if the axial adjusting movement amount can meet ±3mm.

6.8 To check the rest bar assembly if moves flexibly and if can meet the stroke 410mm.

6.9 To check the lubrication piping if has the oil leak. If leak the oil, it is required to check the leak point and re-machine.

7 Inspection rule

7.1 Type check

According to the drawing of DYL58 mill, test the max and minimum opening dimension and check the airtightness. Quality department should keep the original test record of the above two test.

7.2 Check before delivery

The check before delivery should be checked by the Quality department according to the regulation. Check item including the max and minimum center distance, axial alignment, and axial adjusting value. The mill stand can delivery to the customer after sign the certificate of qualification.

APPENDIX A

(NORMATIVE APPENDIX)

DYL58 mill acceptance trial testing table

TEST ITEM		Theoretical value	SERIOUS NO.: ACTUALLY VALUE:
The max center distance at no load		580mm	
The min center distance at no load		460mm	
CLEARANCE DIMENSION CHECK BETWEEN SUPPORT AND CHOCK	Operate side upper left	-	
	Operate side upper right	-	
	Operate side bottom left	-	
	Operate side bottom right	-	
	Spindle side upper left	-	
	Spindle side upper right	-	
	Spindle side bottom left	-	
	Spindle side bottom right	-	
MAX OPENING	UPPER AND LOWER DEVIATION ON TOP AXIAL ALIGNMENT	≤0.2mm	
	LEFT AND RIGHT DEVIATION ON TOP AXIAL ALIGNMENT	≤0.2mm	
	UPPER AND LOWER DEVIATION ON BOTTOM AXIAL ALIGNMENT	≤0.2mm	
	LEFT AND RIGHT DEVIATION ON BOTTOM AXIAL ALIGNMENT	≤0.2mm	
MINIMUM OPENING	UPPER AND LOWER DEVIATION ON TOP AXIAL ALIGNMENT	≤0.2mm	
	LEFT AND RIGHT DEVIATION ON TOP AXIAL ALIGNMENT	≤0.2mm	
	UPPER AND LOWER DEVIATION ON BOTTOM AXIAL ALIGNMENT	≤0.2mm	
	LEFT AND RIGHT DEVIATION ON BOTTOM AXIAL ALIGNMENT	≤0.2mm	
PRESSURE VALUE OF HYDRAULIC STATION		≤0.2mm	
AXIAL ADJUSTING VALUE		±3mm	
ADJ. SCREW OF RESTBAR ASSEMBLY MOVES FREELY OR NOT.		-	
THE STOCK OF RESTBAR ASSEMBLY		410mm	
IF LEAK ON LUBRICATION SYSTEM		-	